Dsize

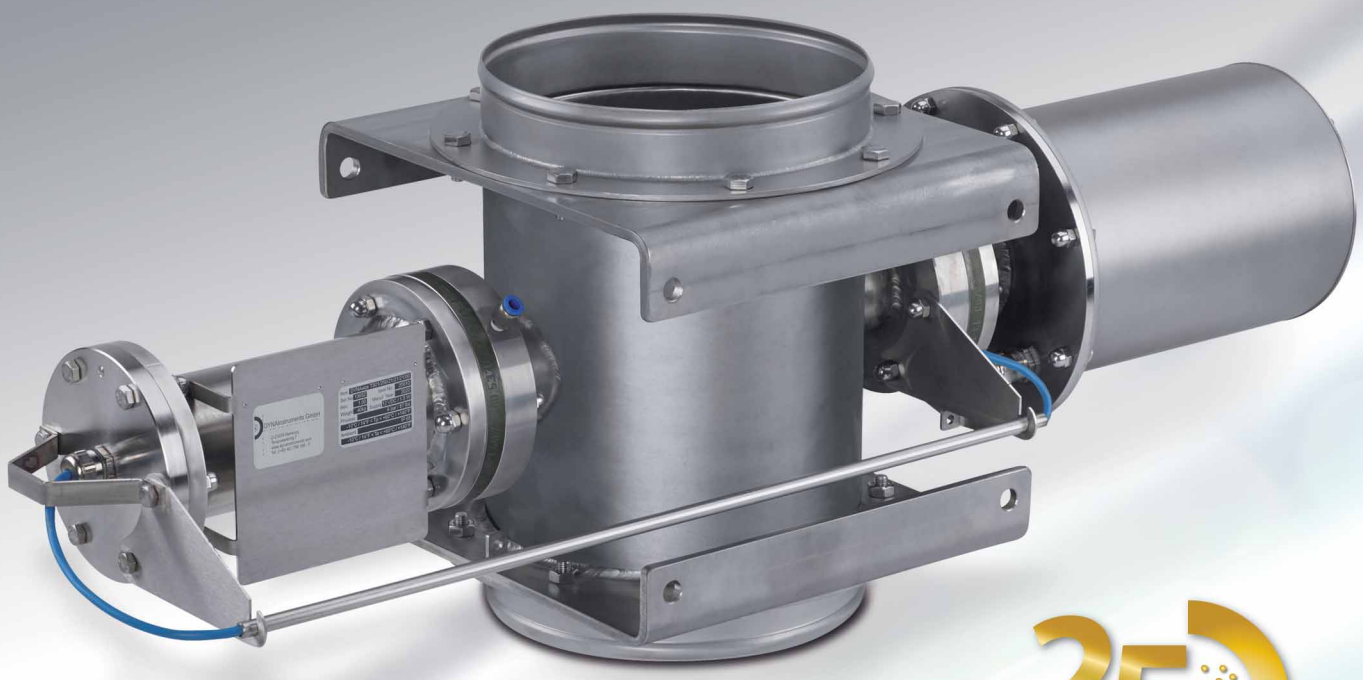

In-Line Particle Size Measurement in Real Time

- Continuous particle size measurement
- Detect screen damage, overflow, overload
- Adjust & optimize screening and grinding processes
- Continuous incoming goods inspection

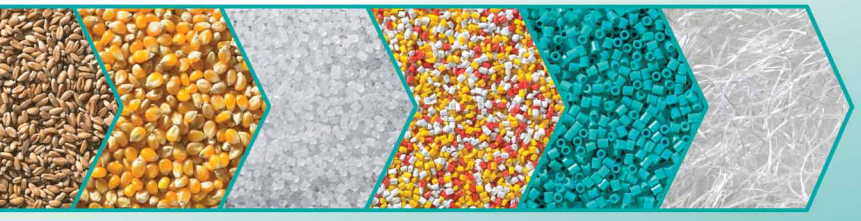

GTS, Inc.

Instrumentation for Powder and Bulk Industries


A partial flow is continuously fed to the optical measuring system via the **skimmer** in the middle of the sensor.

Dsize

In-Line Particle Size Measurement in Real Time

- Direct measurement in the product flow
- Grain size 160 - 6,000 µm
- Good / bad grain difference from 85 µm
- Measurement of up to 10,000 particles per second
- Maintenance-free due to self-cleaning

Dsize is a measuring device for the continuous determination of the particle size of free-flowing bulk materials of all kinds. It is not necessary to take samples for this, because the measurement takes place directly in the process and in real time.

If the adjustable limit values are exceeded or undershot, an alarm can be triggered via two relays. The grain size distribution is displayed using the **Dsize Visual** software and can also optionally be output via an RS485 interface.

The bulk material falls through the sensor pipe for measurement. A representative partial flow is continuously fed to an optical measuring system and measured. The optics are protected by scratchresistant borosilicate glass and contamination is prevented by purge air.

The **Dsize** is unique in its kind and was developed in cooperation with CeMOS respectively the Hochschule Mannheim — University of Applied Sciences.

In cooperation with:

CeMOS
Center for Mass Spectrometry and Optical Spectroscopy

The Benefits to You

- Process and quality security through precise, continuous particle size measurement
- Continuous screen monitoring: Screen damage, clogging, overflow, utilisation of the screen lining
- Optimal utilisation of screen surfaces
- Significantly faster response time than in laboratory analyses
- Reduction / avoidance of manual sampling
- Easy integration into existing systems
- Time savings when optimising screening and grinding plants
- Representative sampling, avoidance of error-prone, manual sampling
- Avoidance of re-screening and downtime
- Excellent cost-benefit ratio

Dsize System Design

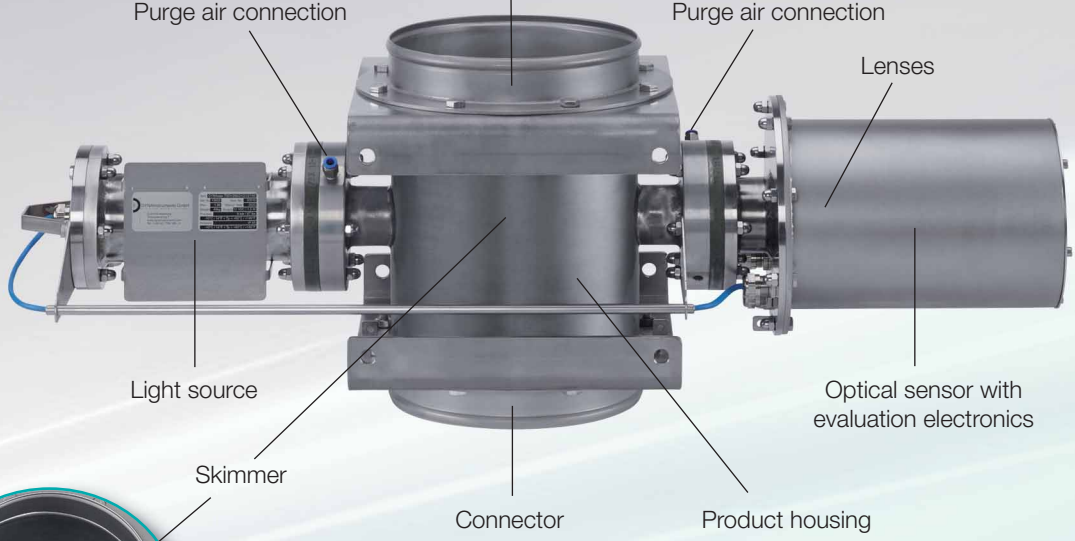

Commissioning

GTS will support you onsite during commissioning. Among other things, the positioning of the skimmer is adapted to the product flow and the functional scope of the software is explained.

Maintenance

The optics are self-cleaning thanks to the integrated purge air. This means that the device can be operated continuously without maintenance or cleaning.

Diffuser

A diffuser is optionally used to distribute the product flow over the pipe cross-section if necessary. It consists of a diffuser sheet or coarse-mesh fabric.

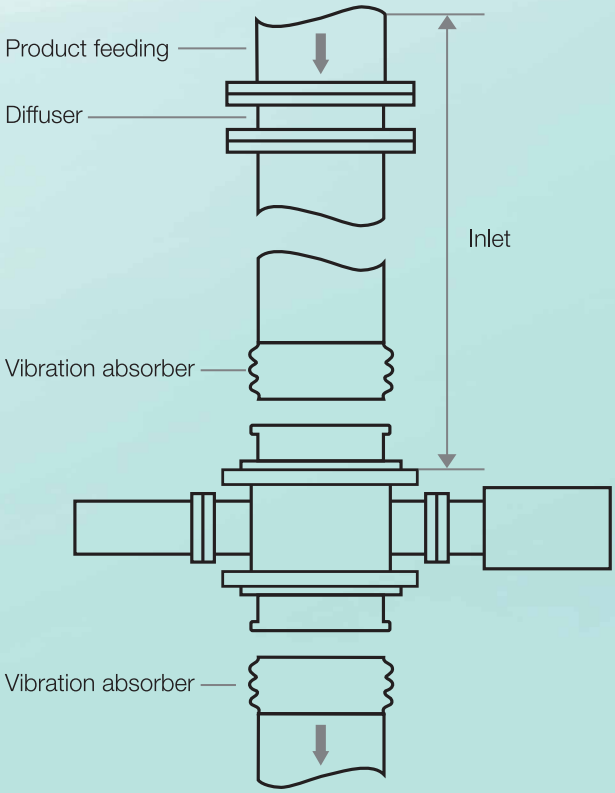

Dsize Operation

Using the Dsize Visual software, operating the particle measurement and visu - alising the measured values is easy. The currently measured grain size distribution is continuously displayed.
In another view, the change in the grain size distribution over time can be shown and documented like with a plotter. One license for the Dsize Visual software comes with every measuring system.

Dsize Visual

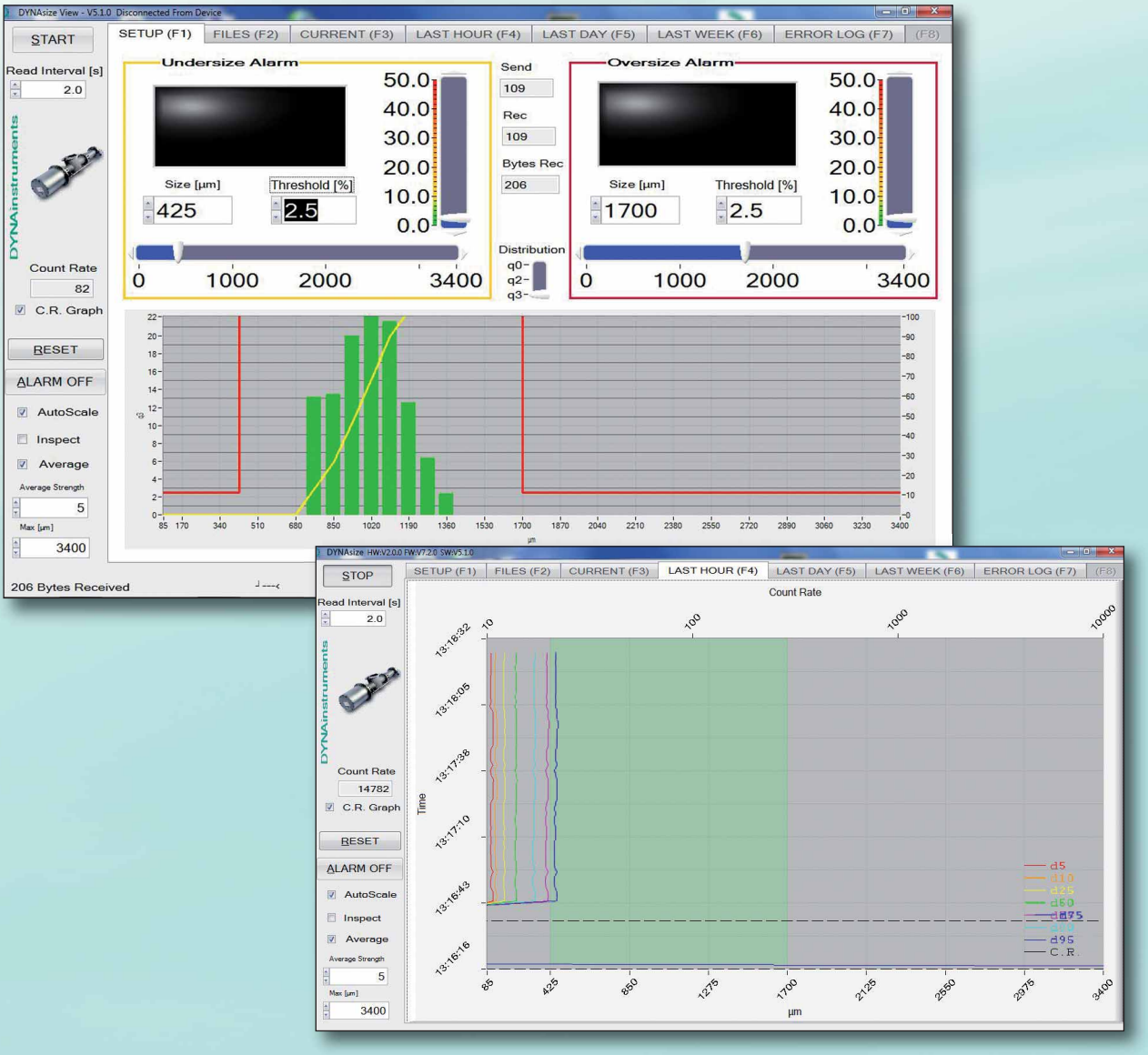

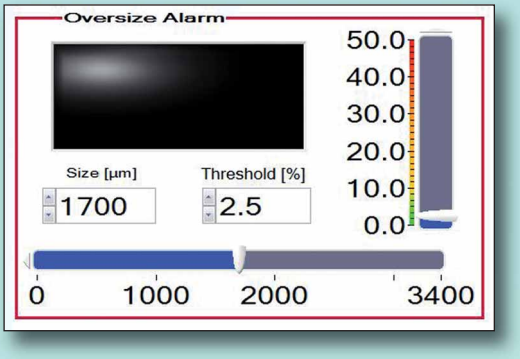

Set limit values

The particle size for the upper and lower alarm value is simply set with the slider or entered directly.
The permitted proportion of oversize particles in the total sum of the particles assessed can be set in percent.

Dsize Applications

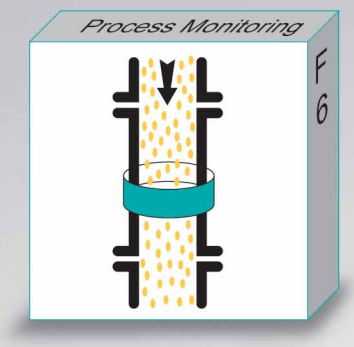

Quality assurance / continuous process monitoring

Continuous measurement makes it possible to continuously monitor a wide variety of processes. Complex laboratory tests on samples can either be reduced or eliminated entirely.
Increased process transparency and process reliability is also possible in places where sampling was previously difficult or impossible. In the course of the digitalisation of manufacturing processes (Industry 4.0), increasing requirements with regard to quality assurance, plant availability and efficiency, **Dsize** opens up new possibilities for optimisation.

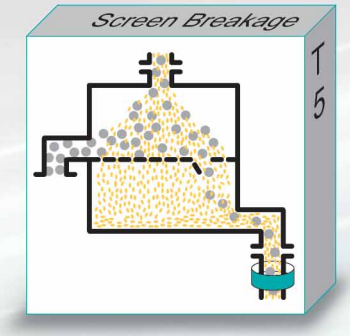

Screen damage detection

Immediate screen damage detection in the process saves time and money. Continuous, reliable particle size measurement of the grain size means that a screen crack can be reacted to immediately. Valuable time — often many hours — can elapse before results of a normal laboratory test are available. Time in which a batch is processed that does not meet the quality requirements. In the best case, once the screen crack has been removed, a batch »only« has to be passed through the screening plant again. Consequential damage can, however, also be significantly greater. However, by immediately shutting down the system, a batch can be completely saved.

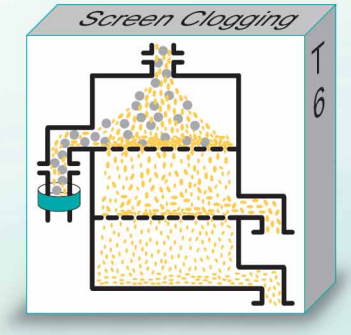

Screen clogging detection

Some products tend to clog screens slowly, e.g. by cumulative build-ups. The result is that the grain size distribution constantly shifts downwards. Good product is increasingly discharged with coarse grains. The performance of the screen drops, good product is lost, and the product no longer meets the specification. With **Dsize**, the slow clogging of screens can be detected early because the particle size distribution of the oversized grain is measured continuously and without any time delay. Measurement results can be visualised with the supplied software or via the PLC. An exchange or cleaning of the screen lining can be planned in advance and is not surprising.

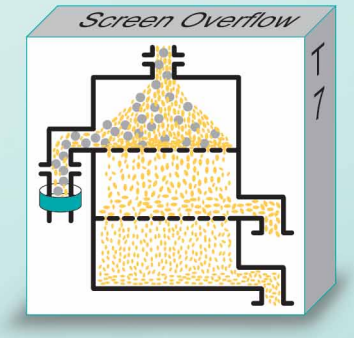

Overloading screens

If a screen is overloaded and too much product gets onto the screen lining, deviating particles can end up amongst the desired grain size.
With **Dsize** permanent monitoring, this is detected immediately, and measures can be taken.

Particle size measurement
Dsize, schematic

Dsize Applications

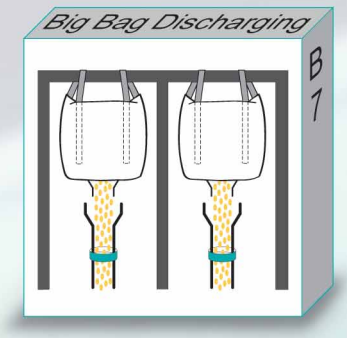

Incoming goods inspection in real time saves time & money

Trust is good, control is better. With the **D size** you can check in real time whether the goods delivered actually meet the specification. In the event of deviations, the system immediately alerts the operator on site. If the measurement is integrated into the system control, automated measures can also be initiated. There is no need to wait for laboratory results and the delivered goods can be processed quickly and safely. In addition, continuous particle size measurement has the advantage that not only one or a few manually drawn samples are used for testing. In this way, deviations can be reliably detected, especially when the bulk material is separated due to transport (Brazil nut effect / segregation).

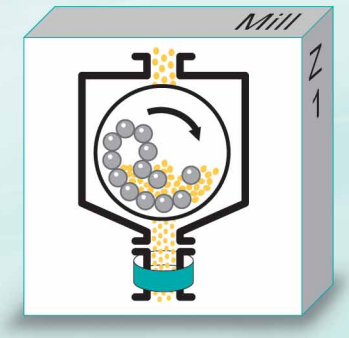

Adjustment of screening and grinding plants

Product changes require plants to be individually adjusted to the respective product again and again. Frequent changes mean a lot of time. The time required for setting can also be considerable when starting up new plants. This time can be reduced to a minimum by means of continuous particle size measurement with the **D size**. Because the effects of changes in machine settings are measured precisely and are immediately visible.

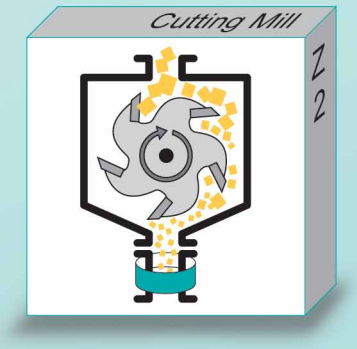

Cutting mill monitoring

The service life of knives in cutting mills is limited and replacement knives are a real cost factor. With continuous particle size measurement, the tool life can be maximised to save costs. It also reliably detects when the knives must be replaced at the latest in order to keep the material safely within the product specification.

Dsize Technical Data

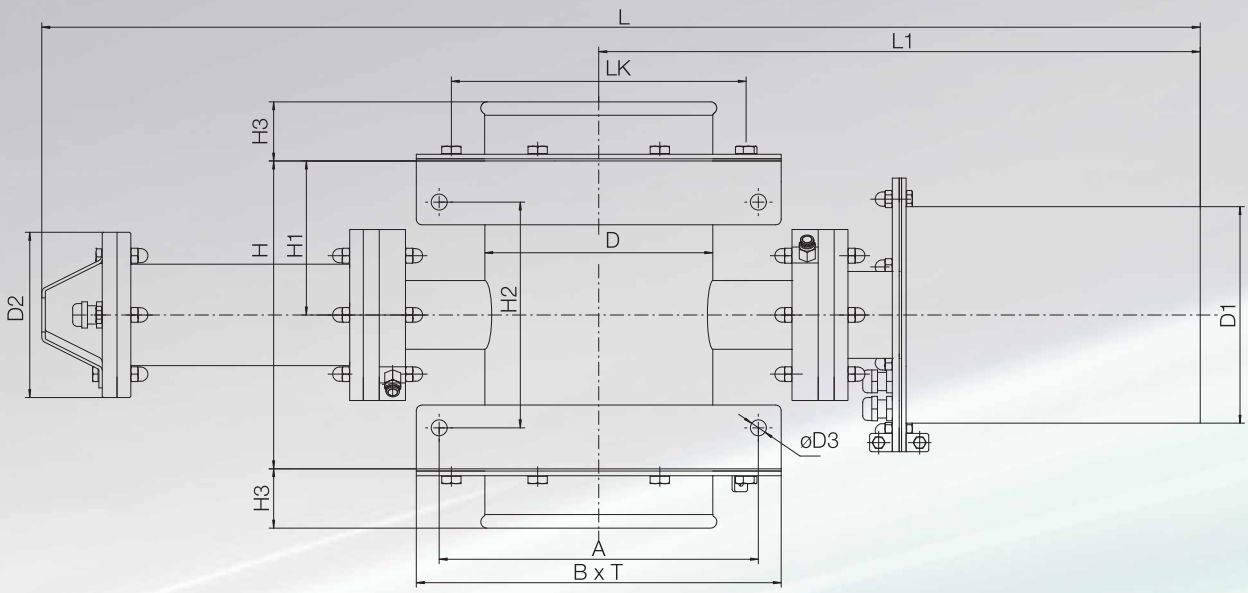

Dsize Sizes

Size	D	W x D	A	LK	Drillings	D1	D2	D3	L	L1	H	H1	H2	H3
200	Ø 200	320 x 350	280	Ø 280	8 x Ø 12	Ø 190	Ø 145	Ø 14	1025	528	270	135	198	52
250	Ø 250	375 x 405	335	Ø 335	12 x Ø 12	Ø 190	Ø 145	Ø 14	1025	528	270	135	198	52
300	Ø 300	440 x 470	400	Ø 395	12 x Ø 12	Ø 190	Ø 145	Ø 14	1025	528	270	135	198	52

All dimensions in mm. Subject to dimensional changes.

Dsize Technical Data

Weight	40 / 44 / 55 kg
Light output	≤ 7 mW
Supply voltage	12 VDC
Current consumption	105 mA
Degree of protection	IP 65
Noise level	20 dB(A) according to DIN 45635
Interfaces	1 x RS485 – IS

Process temperature	- 10…+60° C (14...140° F)
Ambient temperature	0…+40° C (32...104° F)
Process pressure	max. 6 bar / 87 psi
Purge air quality	Instrument air
Certificates	ATEX zones 2/22 (ATEX zones 0/20 in preparation)

Dsize Visual

System requirements	Min. Windows XP – service pack 3

Subject to changes.

Dsize Order Code

Dsize a/b/c/d/e/f/g

	a	Type of device						
	TS01	Standard model with 3 alarm relays and RS485 interface						
		b	Size					
		200	DN200 / 8”					
		250	DN250 / 10”					
		300	DN300 / 12”					
			c	Material product housing				
			21	Stainless steel 1.4541 / AISI 321				
				d	Material electronics housing			
				21	Stainless steel 1.4541 / AISI 321			
					e	Material »skimmer« pipe		
					21	Stainless steel 1.4541 / AISI 321		
						f	Material seals	
						00	NBR 70 (Nitributadiene rubber)	
							g	Certificates
							00	no EX zone
							2/22	EX zone 2/22 inside and outside
Dsize								

Example: Dsize TS01/200/21/21/21/00/00

Dsize connector a/b/c/d/e

	a	Type of device				
	TS	Standard model				
		b	Size of DYNAsize			
		200	DN200 / 8”			
		250	DN250 / 10”			
		300	DN300 / 12”			
			c	Connector outer diameter (without bulge)		
			200	200 mm / 7,87”		
			250	250 mm/ 9,84”		
			300	300 mm / 11,81”		
				d	Material connector	
				21	Stainless steel 1.4541 / AISI 321	
					e	Material seals
					00	Silicone
Dsize Connector (upper)						
Dsize Connector (lower)						

Example: Dsize Connector (upper) TS/200/200/21/00

GTS, Inc.

Instrumentation for Powder and Bulk Industries

- Mass flow measurement
- Flow monitoring
- Throughput trend measurement
- Dust measurement / filter damage detection
- Velocity measurement
- Level detection
- Particle size measurement

Dguard Series

Easy Monitoring of your Bulk Solids Process

- Blockage alarm
- Bridging detection
- Flow monitoring of additives
- Empty hopper alarm
- Leakage monitoring
- Sieve breakage alert
- Sieve overflow alert
- Cyclone monitoring
- Sifter monitoring
- Level detection

With the various flow switches of the **Dguard Series**, there is a solution for almost every task when monitoring of transport processes for bulk solids is needed.
Disturbances in transport systems for powder, granulates, pellets or other bulk material are detected early and severe subsequent damages can be avoided.

Because of the non-contact measurement, transport processes remain undisturbed. With the use of different measurement principles, the best possible choice for the individual application can be made. Almost any bulk material from lowest concentrations up to many t/h can reliably be detected. The instruments have proven themselves also in harsh environments e.g. at blast furnaces in steelworks.

Dguard GM

Filter Leak Monitor / Dust Monitor

- Electrostatic measurement principle (modified triboelectric principle)
- Adjustable signal damping
- Relay or analog output (4…20 mA)
- ATEX zone 2/20

The dust monitor **Dguard GM** is used to detect malfunctions in dedusting plants, which can be caused by damaged or incorrectly installed filtration media. The used electrostatic measurement principle is based on a modified triboelectric principle. Not only particles which hit the measuring rod are detected, but also those passing by. Because signal damping is adjustable, short peaks do not cause a false alarm. The signal gain can be adjusted easily according to the individual process.
With the analog output version (in connection with a PLC) it is possible to monitor more than one threshold and to plan filter maintenance by monitoring the cleaning cycles.

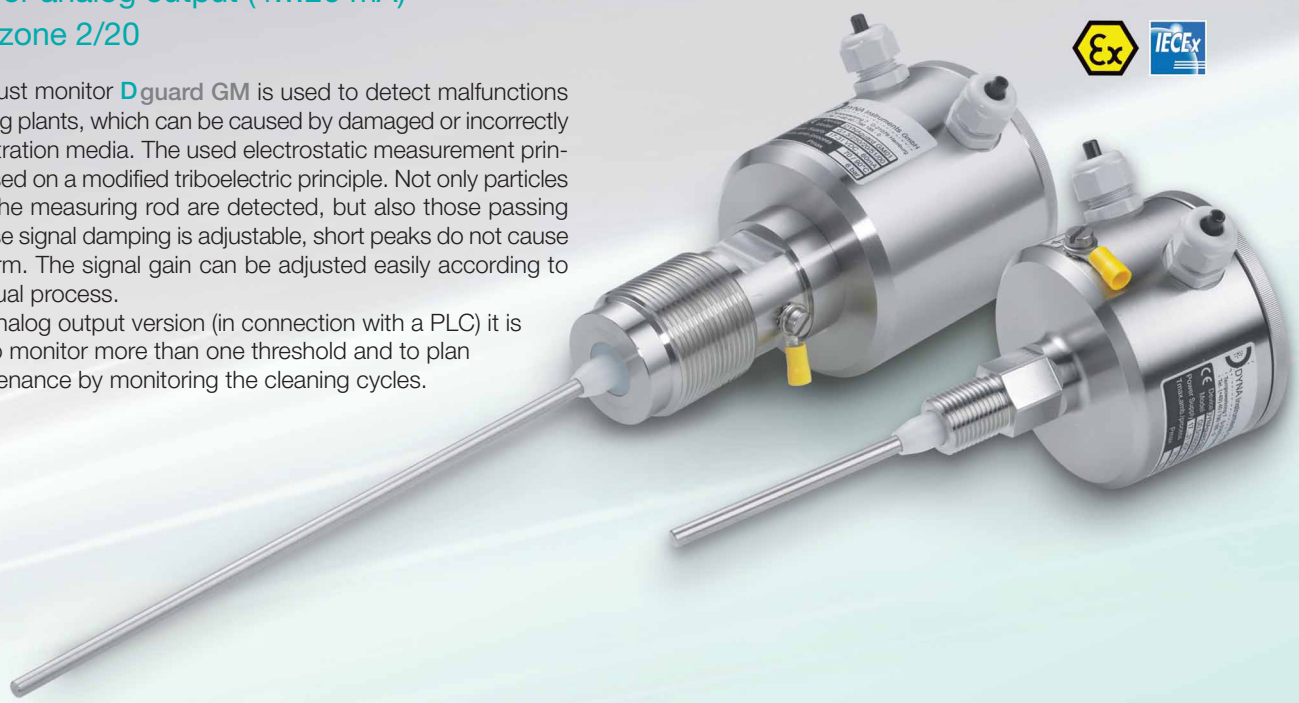

Dmass

Solids Flowmeter

- Pneumatic conveying and free fall
- Non-contact measurement
- Easy to integrate

The **Dmass** (capacitive measurement) is used to determine the mass flow rate of all kinds of bulk solids online, either in pneumatic conveying systems or in free fall.
Separately from each other the transport velocity and the product concentration is measured and used to calculate the mass flow rate. Thus, the instrument is independent from changing transport velocities.
The device is easy to calibrate and because of the small dimensions also easy to integrate in existing plants. It can be used for smaller up to very high flow rates.
Parametrization and display of the measured values is done with the communication unit **Dcon** which has several interfaces for connection to a PLC.

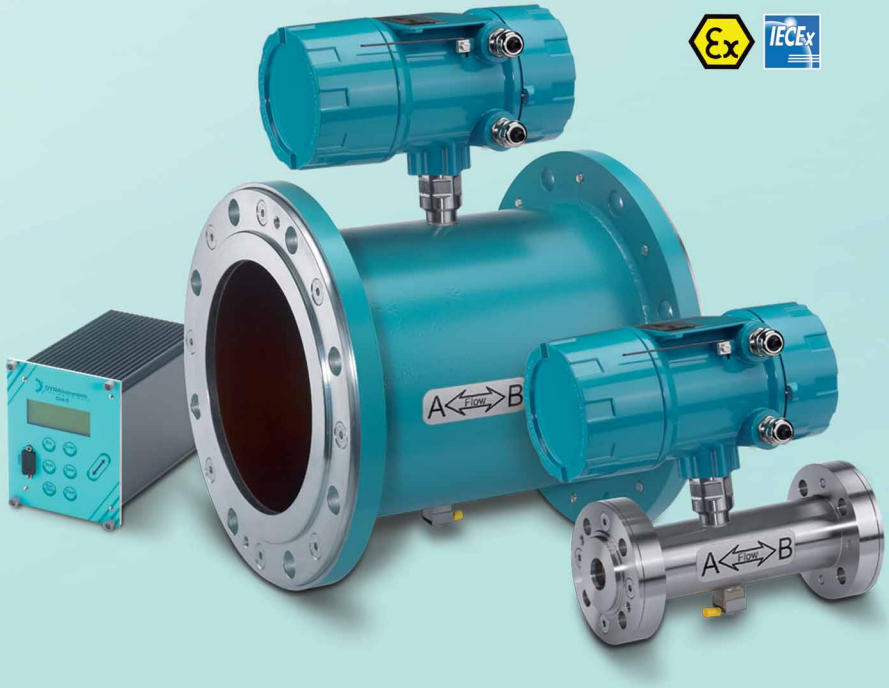

Global Technology Systems

Experts for bulk materials

- Tests with customer products possible
- In-house development & production
- Made in Germany

Innovative Solutions · Proven Technology

for more than 25 Years

- Mass flow rate measurement
- Flow monitoring
- Dust monitoring
- Velocity measurement
- Level detection
- Particle size measurement

ISO 9001
BUREAU VERITAS
Certification

GTS, Inc.
Instrumentation for Powder and Bulk Industries

Contact your local GTS representative:

GTS, Inc.
PO BOX 799
Shalimar, FL 32579 USA

Telephone: + 1 (850) 651-3388
Telefax: + 1 (850) 651-4777

info@onthelevel.com
www.onthelevel.com